TESTS OF REINFORCED CONCRETE COLUMNS: EFFECT OF END CONDITION OF REINFORCEMENT AND OF SPLICING

BY

DANA QUICK MCCOMB

Metz Reference Room
Civil Engineering Department
B106 C. E. Building
University of Illinois
Urbana, Illinois 61801

THESIS

FOR THE

DEGREE OF BACHELOR OF SCIENCE

IN

CIVIL ENGINEERING

COLLEGE OF ENGINEERING

UNIVERSITY OF ILLINOIS

PRESENTED JUNE, 1910

Q.624
Ta10mc

UNIVERSITY OF ILLINOIS

COLLEGE OF ENGINEERING.

June 1, 1910

This is to certify that the thesis prepared in the Department of Theoretical and Applied Mechanics by DANA QUICK McCOMB entitled Tests of Reinforced Concrete Columns: Effect of End Condition of Reinforcement and of Splicing is approved by me as fulfilling this part of the requirements for the degree of Bachelor of Science in Civil Engineering.

F. A. Kramer

A. N. Talbot

Instructors in Charge.

Approved:

A. N. Talbot

Professor of Municipal and Sanitary Engineering
In Charge of Theoretical and Applied Mechanics.

Approved:

Ira O. Baker.

Professor of Civil Engineering.

Digitized by the Internet Archive
in 2017 with funding from
University of Illinois Urbana-Champaign Alternates

https://archive.org/details/testsofreinforce00mcco

TABLE OF CONTENTS.

---o---

Subject.	Page.
PART I.	
Introduction,	1.
PART II.	
Theory and Available Data,	4.
PART III.	
Materials.	7 - 10.
1. Cement,	7.
2. Sand,	9.
3. Stone,	9.
4. Concrete,	10.
5. Steel,	10.
Test Pieces.	11 - 12.
1. Columns,	11.
(a) Forms,	11.
(b) Construction,	11.
(c) Storage,	11.
2. Cubes,	12.
Apparatus,	12 - 14.
1. Testing Machine,	12.
2. Extensometer,	12.
Method of Testing,	14.
PART IV.	
Experimental Data and Discussion of Tests,	16 - 37.
1. Summary of Column Tests,	16 - 17.

TABLE OF CONTENTS.(Continued.)

Subject.	Page.
2. Photographs,	18 – 27.
3. Comparison with Other Tests,	28.
4. Discussion of Individual Columns,	28 – 35.
5. Discussion of Cube Tests,	36 – 37.
PART V.	
Conclusion,	38 – 39.
PART VI.	
Table of Individual Columns,	40 – 48.
Stress–Deformation Diagrams,	49 – 55.

REINFORCED CONCRETE COLUMNS;

EFFECT OF END CONDITION OF REINFORCEMENT AND OF SPLICING.

---o---

PART I.

INTRODUCTION.

In the construction of longitudinally reinforced concrete column as used in buildings, the columns are usually built from floor to floor as the erection of the building proceeds.

Many different methods are used in the arrangement of the reinforcing rods, some of which are --

(1) The reinforcing rods are merely set upon the top of the column already built, as shown in Fig. 1, Plate I;

(2) The rods are bent in approximately a quarter circle outward at the base of the column, into the footing or floor beneath the column as shown by Fig. 2, Plate I;

(3) The rods are spliced by lapping past each other, the stress being transmitted from one rod to the other only by the adhesion of the concrete to the rods, as shown in Fig. 3, Plate I;

(4) The rods are spliced by squaring the ends and holding them in place with a sleeve, usually of gas pipe, the inside diameter of which is the same, or a little larger than the diameter of the rods.

When tests upon reinforced concrete columns are made in testing laboratories, the reinforcing rods are usually continuous, without splice, and with the ends squared, insuring a solid bearing upon the cast iron plates at each end of the column. This is the most efficient method possible of reinforcing concrete columns, but as its use in actual construction is usually impracticable, other less efficient methods, some of which are given above, are

used instead.

The purpose of this thesis is to record and discuss a series of tests made upon longitudinally reinforced columns under various conditions of reinforcement, and to determine their efficiency under the different conditions, as compared with the ideal type.

The efficiency of each type of column will be expressed as the ratio of the average unit strength of each type to the average unit strength of the ideal type.

The "End condition of reinforcing rods" in the different types of columns tested are as follows, the numbers in parentheses indicating the number of columns of each type of reinforcement:-

(3) Ends of rods squared and resting directly upon the cast iron base plates; (1) Ends of rods sheared, with uneven bearing upon the base plates; (2) Ends of rods 2 in. off the base plates, supported by a loose gas pipe sleeve and a wooden plug; (2) Rods with ends squared, resting upon a concrete base; and (1), Rods bent on a 6-in. radius into a concrete base.

The diff erent methods of splicing the reinforcing rods are as follows, the numbers in parentheses having the same significance as before:-

(2) Ends of rods squared, and held in position by a loose gas pipe sleeve, whose inside diameter is a very little larger than the diameter of the rods; (2) Ends of rods lapped 12 in.; and (2) Ends of rods lapped 24 in.

Most of the data for the strength of plain concrete columns, used for purposes of comparison in this thesis, were obtained from a series of tests made by Messrs. Tobey and Fredenhagen, of the Class of 1910, University of Illinois, and reported in their thesis.

All columns used in these tests were made in the Laboratory of Applied Mechanics, University of Illinois. The experiments were carried on as a part of the work of the Engineering Experiment Station.

PART II.

THEORY AND AVAILABLE DATA.

---o---

Without going in detail into the derivation of the different formulas, the theory of the column reinforced longitudinally is as follows -

The assumption is made that the concrete adheres to the steel, and therefore the stress in the two materials varies as their moduli of elasticity. Using the same notation as is used in "Turneaure and Maurer's Reinforced Concrete Construction",-

Let A = total cross-sectional area of the column;

A_c = total cross-sectional area of concrete;

A_s = total cross-sectional area of steel;

p = ratio of area of steel to total area of the column;

f_c = unit stress in concrete;

n = ratio of moduli of steel and concrete, $(\frac{E_s}{E_c})$;

P = total strength of a plain column for the stress f_c;

P' = total strength of a reinforced column;

d = diameter of the column;

e = unit deformation for the stress f_c;

Then for a plain concrete column -

$$P = f_c A_c = f_c A.$$

And for a reinforced concrete column -

$$P' = f_c A(1+\overline{n-1}p).$$

- - - - - - - - - - - - -

For the derivation and discussion of these formulae, see "Turneaure and Maurer's Reinforced Concrete Construction", and Corwine and Hohnquist's Thesis, University of Illinois, Series of 1909.

The relative increase in strength caused by the reinforcement is -

$$\frac{P' - P}{P} = \frac{f_c A(1 + \overline{n - 1}\, p - 1)}{P} = (n - 1)p.$$

All reinforced columns in this series of tests have a cross-section as shown in Plate III, Column No. 6513.

$$p = \frac{A_s}{A} = \frac{A_s}{1/4 \cdot \pi \cdot d^2}$$

The net area of the concrete is-

$$A_c = (1 - p)A = (1 - p) \cdot \pi \cdot d^2.$$

The load taken by the steel is -

$$eE_s pA = eE_s p \cdot 1/4 \cdot \pi d2.$$

Then the unit stress in the concrete =

$$f_c = \frac{P' - eE_s p \cdot 1/4 \cdot d^2}{(1 - p) \cdot 1/4 \cdot d^2} = \frac{P'}{(1 - p) \cdot 1/4 \cdot d^2} - \frac{eE_s p}{(1 - p)}$$

It is seen that this quantity is a binomial, of which the first term represents the total stress in the column, and the second represents the stress taken by the steel. If these two quantities are plotted graphically on the same set of co-ordinate axes, the result will be as shown in Fig. 1; the curved line represents the first term of the binomial, and the straight line represents the second term. The stress f_c for any deformation will be the difference between the ordinates at that point.

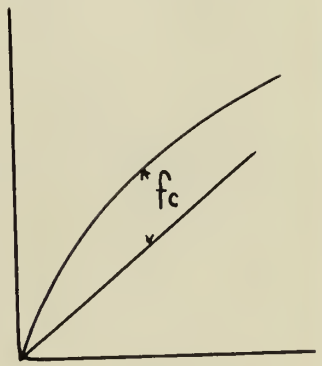

Fig. 1.

All the stress-deformation diagrams, Part VI, are plotted in this manner.

The only available data bearing in any way upon this subject is found in Corwine and Holmquist's thesis,- two columns, the reinforcement of which was sliced at the center with tight-fitting

sleeves of gas pipe, similar to Columns No. 8531 and 8532 of this series. As a result of their tests, they concluded that a splice made in this manner had no effect in any way upon the strength of a column containing such a splice.

PART III.

MATERIALS.

---o---

1. Cement.

The cement used in the construction of these columns was Universal Portland Cement. No tests were made to determine the soundness or fineness, but the other qualities are given in the following table, the sample tested being taken from the same lot from which the columns were made.

Table No. 1.

TIME OF SETTING AND TENSILE STRENGTH

of

UNIVERSAL PORTLAND CEMENT.

Time of Setting.		Tensile Strength. (Average of 5 tests).			
Initial Set.	Final Set.	7 Days.		28 Days.	
		Neat.	1-3 Mortar.	Neat.	1-3 Mortar.
0 hr.-50 m.	3 hr.-25 m.	513 lb.	217 lb.	649 lb.	315 lb.

2. Sand.

The sand used was Wabash River sand, from Attica, Indiana; fairly clean, brownish in color; grains somewhat rounded on corners; the percentage of voids contained, as determined by an average of three tests, was 26.5; the specific gravity was 2.73.

The sand was fairly well graded in size, the the following table giving the results of the analysis -

Table No II.

FINENESS OF SAND.

Total weight of sand tested = I000 grams.

Sieve No.	10	18	30	40	50	74	Pass. 74.	Total.
Wt. ret. (grams).	243	255	214	119	95	38	31	995
% ret.	24.3	25.5	21.4	11.9	9.5	3.8	3.1	99.5

3. Stone.

The stone was limestone from Kankakee, Illinois, crushed to pass a 1-in. sieve. The stone was gray in color, sharp cornered, and well-graded as to size. In testing both sand and stone, the material was put into the top sieve of a series of sieves, grading downward from coarse to fine, with a pan at the bottom to catch all the material passing the finest sieve. These sieves were agitated for thirty minutes by a special machine used for that purpose in the cement-testing laboratory of the University of Illinois.

Table III gives the results of the stone tests -

Table No. III.

FINENESS OF CRUSHED STONE.

Total weight of stone tested = 1000 grams.

Sieve No.	1.0 in.	0.67 in.	0.45 in.	0.30 in.	0.20 in.	Pas. 0.20	Total.
Wt. ret. (grams)	89	257	133	346	130	128	994
% ret.	8'9	2.57	1.33	3.46	1.30	1.28	9.94

It will be noticed that in the tests of both sand and stone the respective sums of material retained by the sieves and the pan are not equal to the amount of material with which the test commenced. This loss of material can be accounted for in two

ways - errors in reading the scales upon which the materials were weighed, and the grinding of the material into a dust which adhered to the sides of the sieves and the pan, and thus was not included in the remainder of the material weighed.

4. Concrete.

The concrete was composed of one part by volume of cement, two parts of sand and four parts of stone; the sand and stone were weighed as a check on the measurement by volume, and the weight of a cubic foot of cement was taken as 95 lb. Enough water was added to make a rather wet mixture, the amount of water used being weighed also. The wet mixture was necessary in order to insure the complete filling in of the forms between and around the reinforcing rods.

The concrete at the top of the column was made somewhat richer in cement than the remainder, in order to make sure that the failure would occur at some other part of the column than at the top.

Before mixing the concrete the stone was well wet to prevent its absorbing an undue amount of water from the fresh mixture. Each batch of concrete was mixed by hand upon the smooth cement floor of the laboratory. The whole work of mixing the cement and making the columns was in charge of a former contractor of cement construction, a man of long experience in this class of work.

5. Steel.

The steel used was high-carbon steel round rods, 1-in. in diameter, and six rods were used to each column. No tests of any kind were made to determine the qualities of the steel.

The arrangement of the reinforcing rods is given in Table

No. IV, and in Plates III - VI.

TEST PIECES.

1. Columns.

(a) Forms.

The forms in which the columns were made were of galvanised sheet steel, bent into the form of a cylinder, about 12 in. in diameter and 2 ft. 6 in. long. The sheets were held in circular form by adjustable hoops of wrought iron, and were fitted together end to end in a manner similar to that of joining stove pipe.

(b) Construction.

In constructing the columns, the hollow steel cylinders were placed upon a cast iron plate 1 in. thick, 14 in. square, with planed faces. The reinforcing rods were put into place, and held there by three steel band hoops, one each at the top, middle and bottom, to which the rods were wired. These hoops were 10 in. in diameter, and the rods were spaced equally around the inside circumference of the hoops, in all cases except in column No. 8511, where the rods were spaced outside the hoop. (See Plate III).

The concrete was then poured in, in layers of 6 to 8 in., and well tamped to insure its reaching all parts of the form.

(c) Storage.

After making, the columns were stored in the concrete laboratory until wanted for testing. They were kept in an upright position, at a fairly constant temperature from the time they were made until they were tested.

2. Cubes.

In order to test the quality and strength of the concrete, three test cubes 6 in. on an edge were made from each batch mixed for a column. These cubes were stored in damp sand until wanted for testing.

APPARATUS.

1. Testing Machine.

The machine used was the 600,000- lb. Riehle machine used for testing columns at the University of Illinois. This machine will admit columns up to 25 ft. in length.

2. Extensometer.

The extensometer used was manufactured by A. Wissler, St. Louis, Mo. A photograph of it in use is shown on page 27, and a sketch illustrating the method of using it is shown in Plate II.

The extensometer consists of a dial (A) fixed to a yoke (B), which clasps the column at two points (x, x) one on each side of the column, so the yoke is left free to revolve about a horizontal axis. This yoke is adjusted to the column near the bottom, and another yoke (C) is adjusted just 40 in. above the lower one, and parallel to it. The upper yoke has two points of contact on each side of the column instead of one, and thus it is held firmly in the position to which it was originally adjusted. (See "Half - Plan of Yokes", Plate II).

The yokes are each made of two pieces of angles (a, a) 2 in. x 2 in. x 1/4 in., held together by bars of steel (b, b) at each end, about 14 in. one from the other. The distance between the angles is adjusted by a thumb nut (c, c) on each end of each bar, and the bars are prevented from turning by a lock nut (d, d),

against which the thumb nut holds the angle.

In the center of one of the bars (b) of the lower yoke is fastened the extensometer, the dial of which is fastened to the bar by a brass screw (e) passing thru a small hole in the bar, and a nut (f) on the opposite side of the bar. The dial is held immovable by this screw and nut, while the pointer, mounted on a pivot, is movable, swinging about the circumference of the dial.

On the side of the yoke opposite the extensometer is a vertical rod, one end of which is screwed in to the horizontal bar (b) of the upper yoke, and the rounded lower end rests in a cup-shaped depression in the horizontal bar (b) of the lower yoke, being held in place by rubber bands wrapped around the lower horizontal bar (b) and around a pin (h) thru the vertical rod near the lower end.

Immediately above the extensometer a brass pin (k) is fastened by passing thru the upper horizontal bar (b), and a nut (m) screwed on the inner end of the pin. From this pin is suspended a weight (w), in this case a nut, hung by a very fine copper wire (p), reaching from the pin (k) to a point below the extensometer. The wire is wrapped with one turn around a small pulley (s) fastened to the pointer.

When a load is applied to the column, the column shortens a little; the upper yoke (C) moves downward with the column, always remaining parallel to its original position. The vertical rod moves downward with the upper yoke, pushing on the lower yoke, which revolves about the central axis (x - x), raising the extensometer, and causing the pointer of the dial to revolve instead

of raising the weight (w) suspended below. The dial is so graduated that the actual deformation in 40 in. can be read directly, on the dial itself and on the vernier at the end of the pointer; the reading on the vernier being in ten-thousandths of an inch.

METHOD OF TESTING.

Under the heading "Construction" it was stated that the columns were built upon a cast iron plate. When the specimen was to be tested, a layer of plaster-of-Paris was spread over the top of the column, and another plate, similar to the one at the bottom, was put on above the plaster-of-Paris. The two plates were bolted together by two long rods about 5/8 in. in diameter and 5 ft. long, which hooked into eyes screwed into holes in the bottom plate, and passed thru holes in the upper plate. Nuts and washers were put on the upper ends of the rods, and screwed down tightly before the plaster-of-Paris had set.

The columns were placed as near as possible in the exact center of the machine, in no case being more than 1/8 in. out of center.

The head block, which transmitted the load to the column, had a spherical bearing, so as to enable it to adjust itself to bear equally all over the end of the column, whether it was exactly horizontal or not.

After placing the column, and making sure that it had a solid bearing on the bed of the testing machine, the rods were removed, and the head block was lowered into position and carefully centered on top of the column. The load was applied in increments of approximately 25,000 lb., and the column was

watched carefully for cracks or other signs of failure.

Deformations were measured only on half of the total number of columns, the object of the test being not so much to determine the deformations as to ascertain the load which would cause failure in each column.

PART IV.

---o---

Table No. IV.

ARRANGEMENT OF REINFORCEMENT.

Note:- All rods 1 in. in diameter, spaced equally inside 10-in. circle except column No. 8511, which has rods spaced equally outside 10-in. circle.

Column No.	Arrangement of Reinforcement.
8511, 8512, 8512	Ends of rods milled, even bearing on both end plates.
8516,	Ends of rods sheared, uneven bearing on both end plates.
8517,	No reinforcement whatever, thru error in making.
8518, 8519,	Rods 2 in. off plate at each end of column, held in place by piece of gas pipe 4 in. long and wooden plug.
8524, 8525,	Rods set on concrete base, 18 in. square, 6 in. deep, restrained by heavy hooping. Base made 5 days before column.
8526,	Column made with base 25 x 24 in., 5 in. deep; ends of rods bent into base on a 6-in. radius.
8531, 8532,	Rods spliced at center with gas pipe sleeve, 6 in. long, loose fit.
8536, 8537,	Rods spliced at center with 24-in. lap.
8538, 8539,	Rods spliced at center with 12-in. lap

Table No. V.

SUMMARY OF COLUMN TESTS.

Length, 5 ft. (approximately.)

Mixture, 1 - 2 - 4.

(Note:- At the top of each column the mixture was made a little richer in cement to prevent failure at this point.)

Column No.	Age when tested, days	Area Sq. in.	Per cent. Reinf.	Maximum load, lb.	Maximum Stress, lb. per Sq. in.	Efficiency A	Efficiency B
8511	60	123	3.83	323000	2640		
				Av.	2640	0.73	1.22
8512	62	131	3.60	490000	3740		
8513	59	130	3.62	452000	3460		
				Av.	3600	1.00	1.62
8516	63	135	3.50	449000	3320		
	59	125		Av.	3320	0.92	1.54
				223000	1790	0.50	
8518	59	128	3.68	250000	1950		
8519	74	135	3.50	248000	1840		
				Av.	1895	0.53	0.88
8524	61	141	3.35	329000	2230		
8525	68	134	3.52	294000	2180		
				Av.	2205	0.61	1.02
8526	62	134	3.52	425000	3170		
				Av.	3170	0.88	1.48
8531	65	134	3.52	403000	3010		
8532	73	134	3.52	394000	2940		
				Av.	2975	0.83	1.38
8536	64	134	3.52	325000	2430		
8537	69	134	3.52	319000	2340		
				Av.	2385	0.66	1.10
8538	59	139	3.40	279000	1870		
8539	69	135	3.50	311000	2300		
				Av.	2085	0.58	0.97

Note:- Efficiency "A" is the ratio of the average unit strength of each type of column to the average unit strength of Columns No. 8512 and 8513; and Efficiency "B" is the ratio of the average unit strength of each type of column to the average unit strength of plain concrete columns, as given in Table No. VI.

NO.8511
323000LB

8512
8531

8538
8516

8526
8524

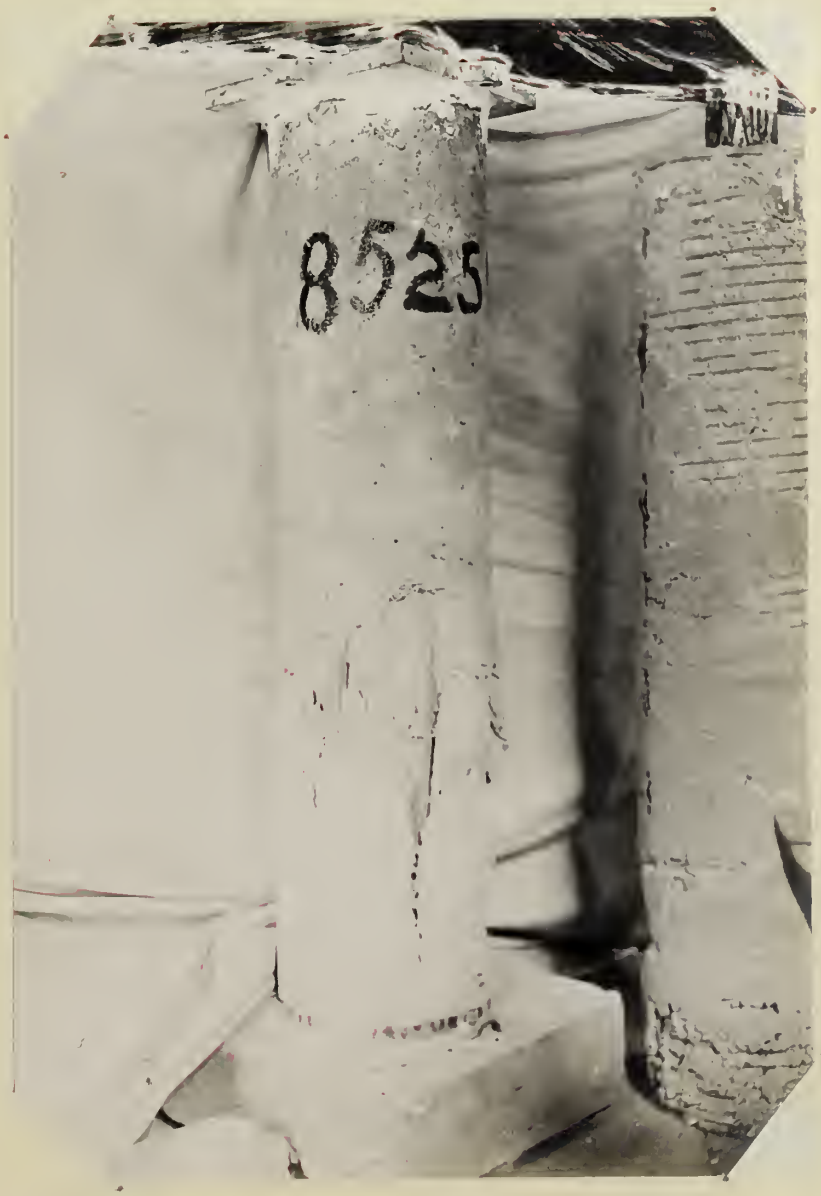
8525

Types of Reinforced Concrete Columns Used in Buildings.

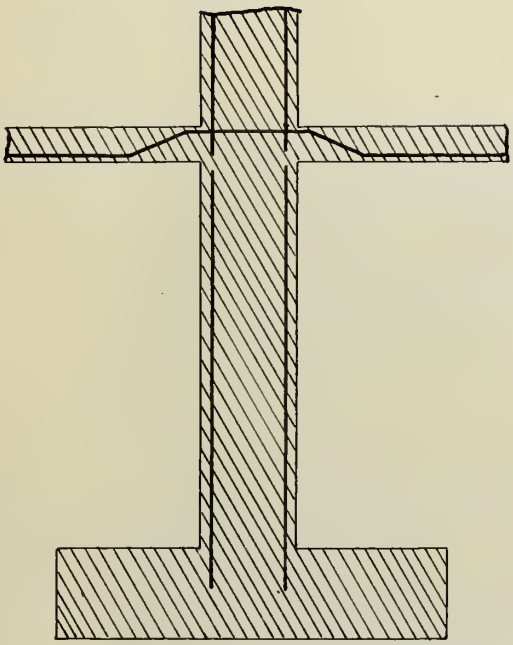

Fig. 1.

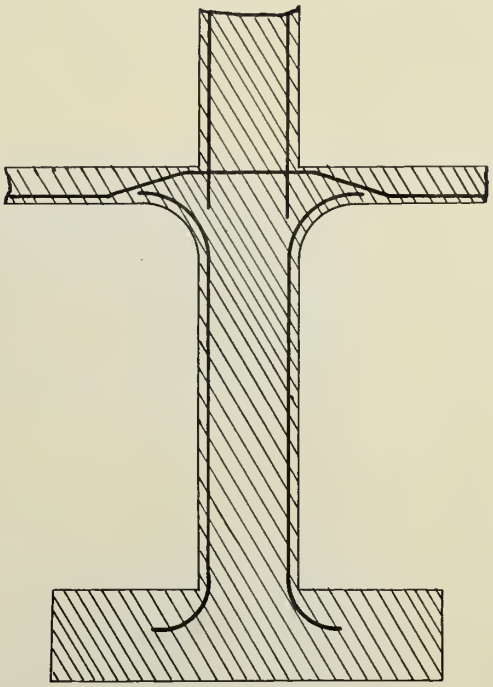

Fig. 2.

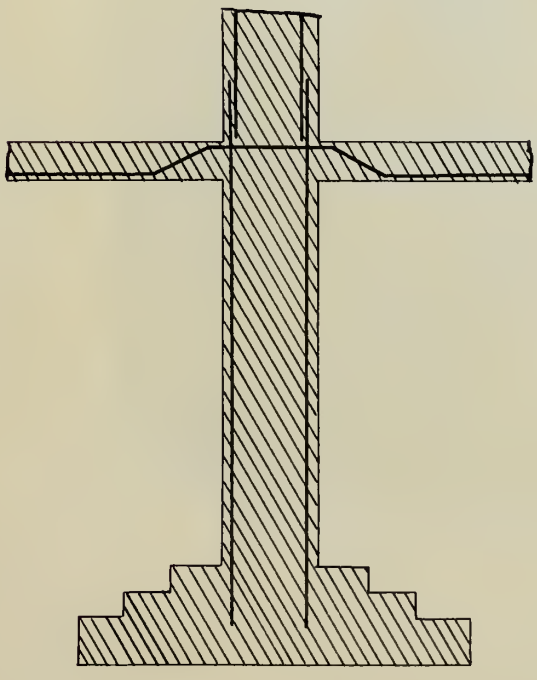

Fig. 3.

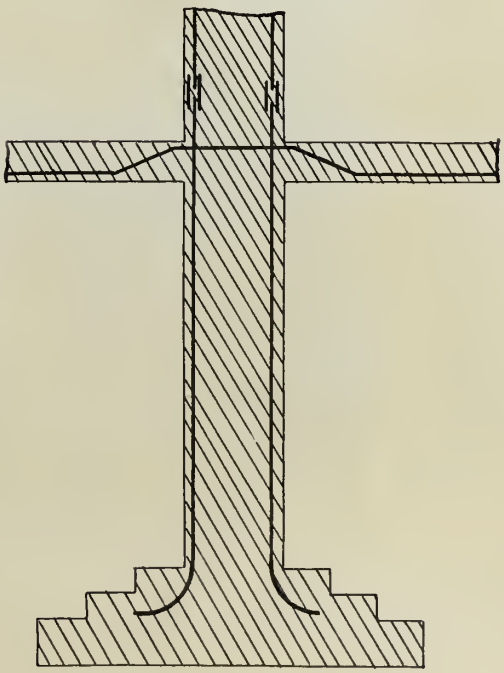

Fig. 4.

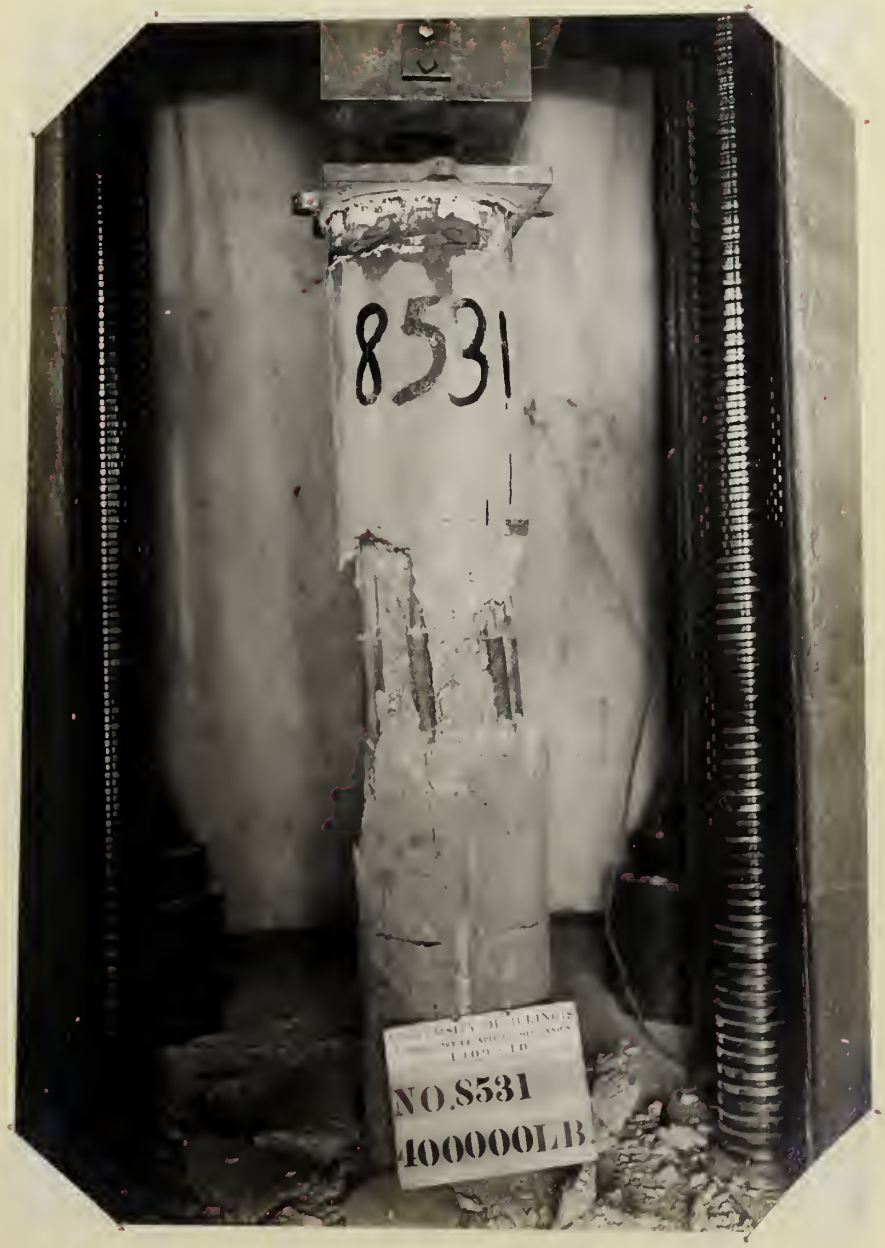
8531
NO.8531
400000LB.

852

Table No. VI.

RESULTS OF TESTS ON PLAIN CONCRETE COLUMNS.

All Columns about 5 ft. in length.

(Columns No. 8501, 8502 and 8503 tested by Tobey and Fredenhagen; Column No. 8517 tested by McComb.)

Column No.	Age when tested, days.	Area, sq. in.	Maximum load, lb.	Maximum stress, lb. per sq. in.
8501	76	116.9	275000	2360
8502	60	118.8	284000	2390
8503	60	115.0	241000	2096
8517	59	125.0	223000	1790

Upon comparing this table with Table No. V, it will be seen that the columns without reinforcement seem to be stronger than many of those which are reinforced. It will also be seen that the one column without reinforcement in the series reported in this thesis, (Column No. 8517), failed under the smallest load of all - 1790 lb. per sq. in.

This can not be attributed to the poor quality of the concrete, nor to the mixing; for the average strength of the cubes made from the same batch of concrete as this column was considerably above the average strength of cubes from the same batches of concrete as other columns - Nos. 8537, 8538 and 8539. (See Table No. VII.)

(3) Discussion of Individual Columns.

In this discussion each column will be taken up separately, the phenomena observed during the test will be discussed, and reasons will be given for the behavior of the specimens under the different conditions of reinforcement, as only in reinforce-

Plate II.

METHOD OF ATTACHING EXTENSOMETER TO COLUMN.

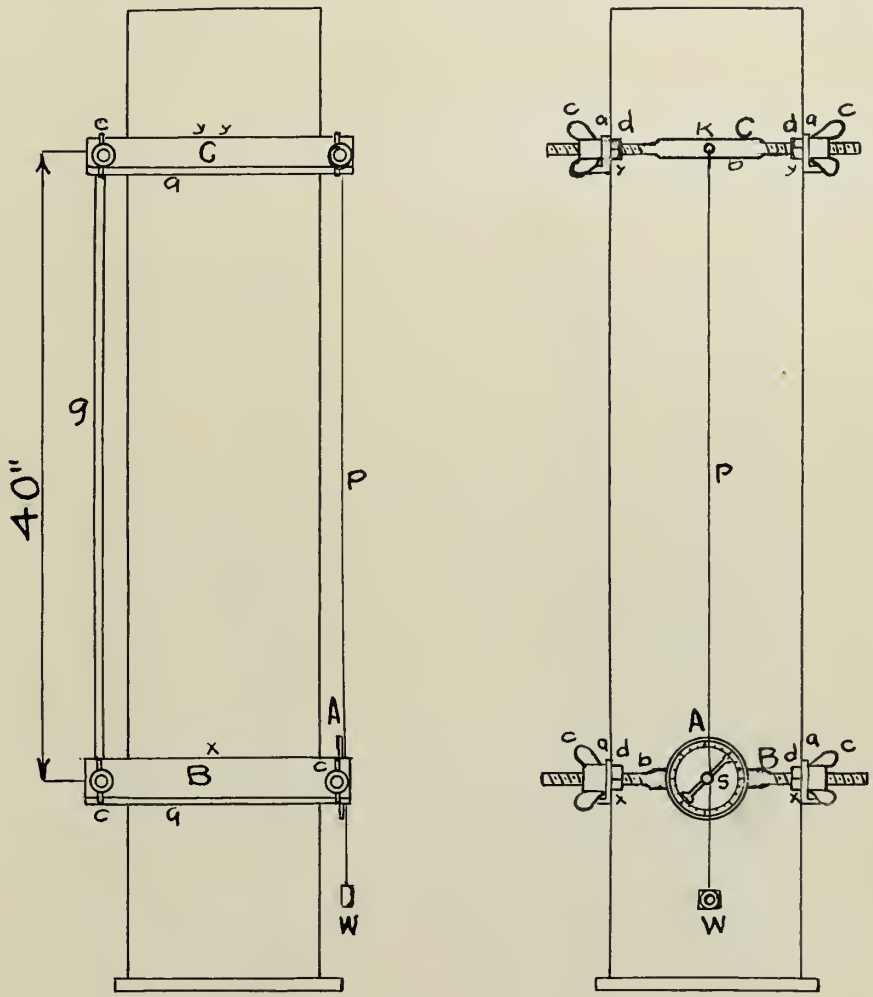

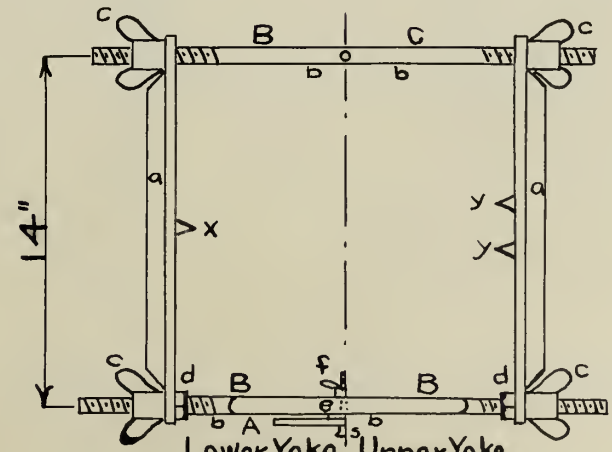

Lower Yoke. Upper Yoke.

HALF PLAN OF YOKES.

Arrangement of Reinforcement in Reinforced Concrete Columns.

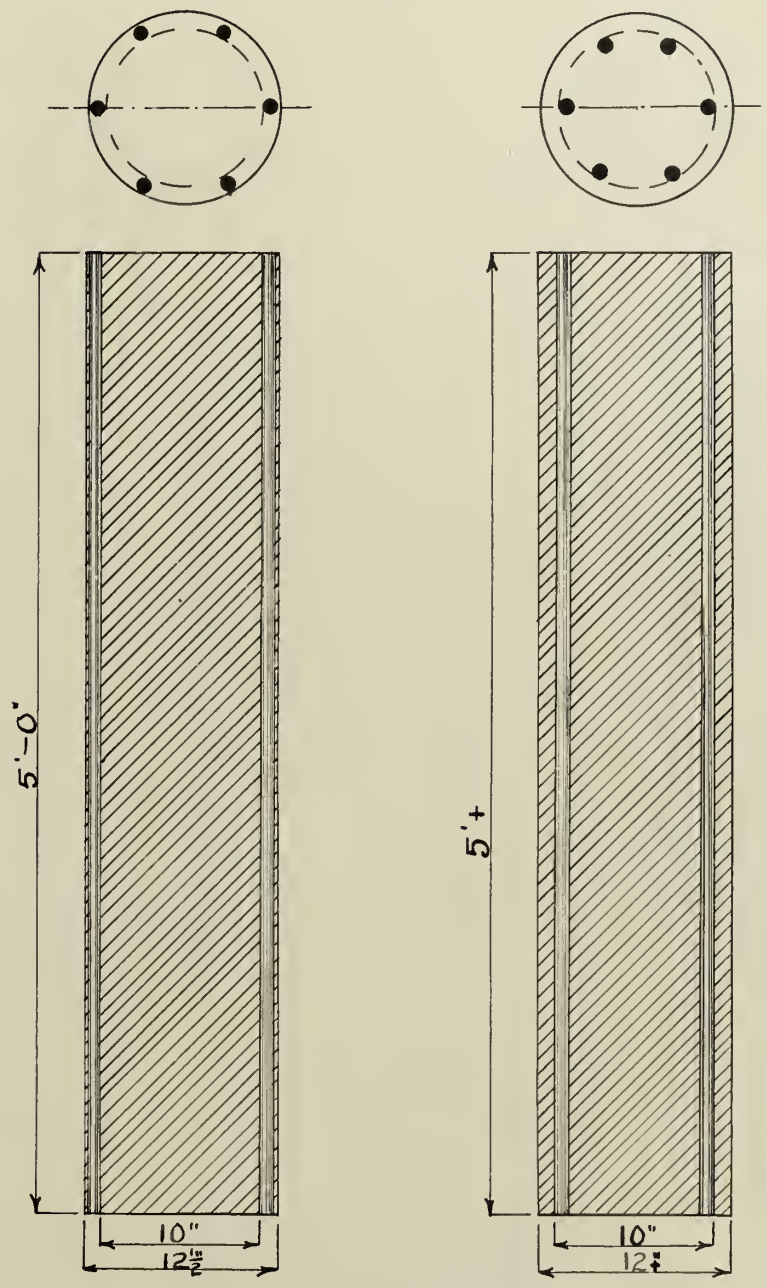

No. 8511.

Nos. 8512, 8513 & 8516.

Arrangement of Reinforcement in Reinforced Concrete Columns.

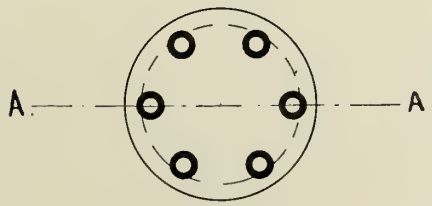

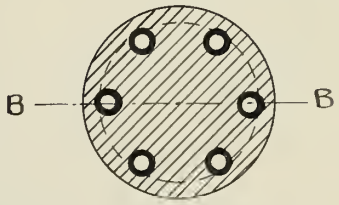

Sec. C-C.

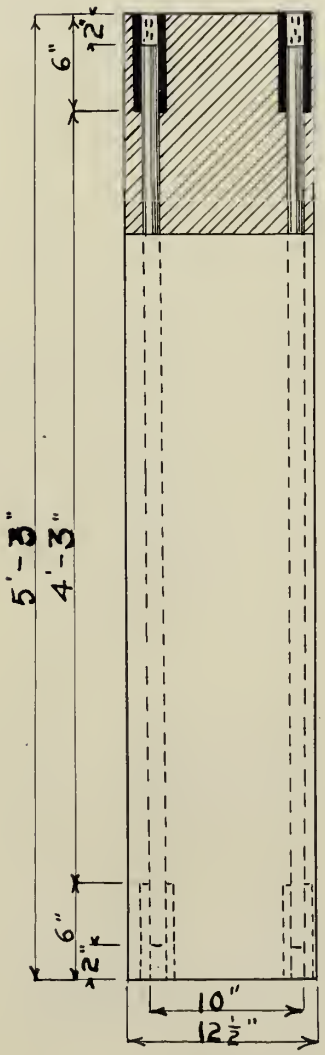

Sec. A-A.

Nos. 8518 & 8519.

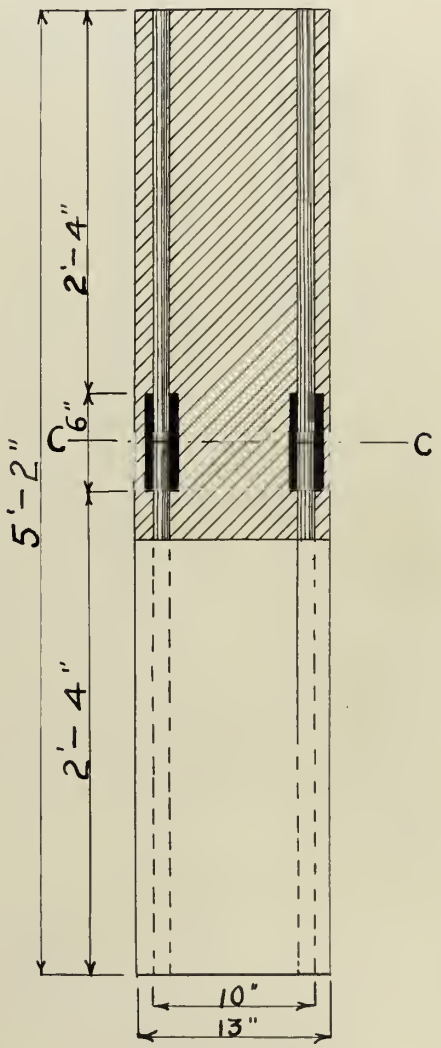

Sec. B-B.

Nos. 8531 & 8532.

Plate V.

Arrangement of Reinforcement in Reinforced Concrete Columns.

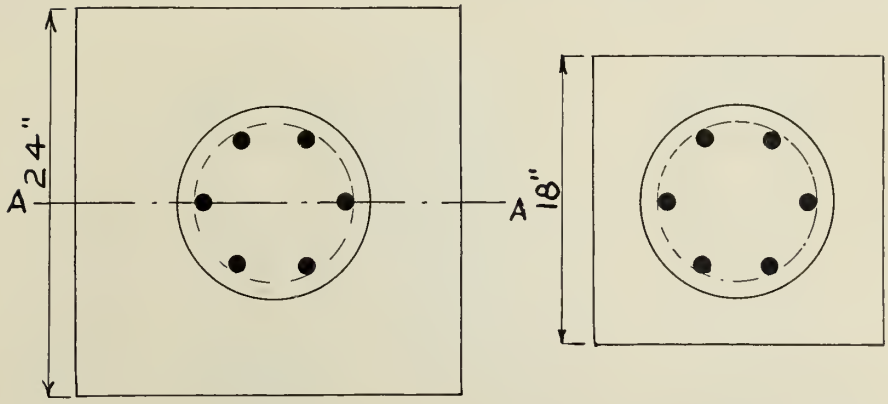

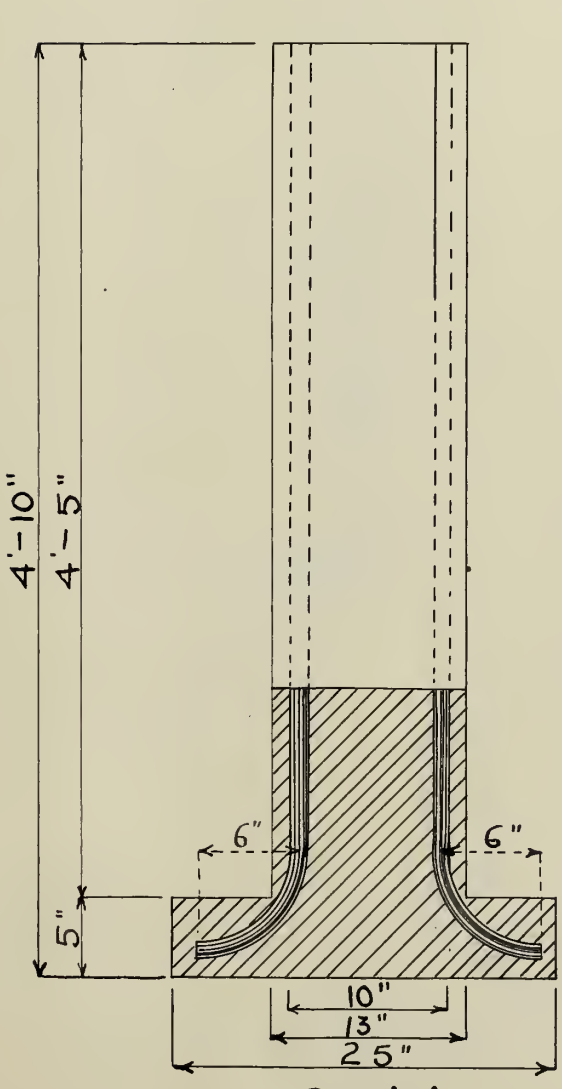

Sec. A-A.

No. 8526.

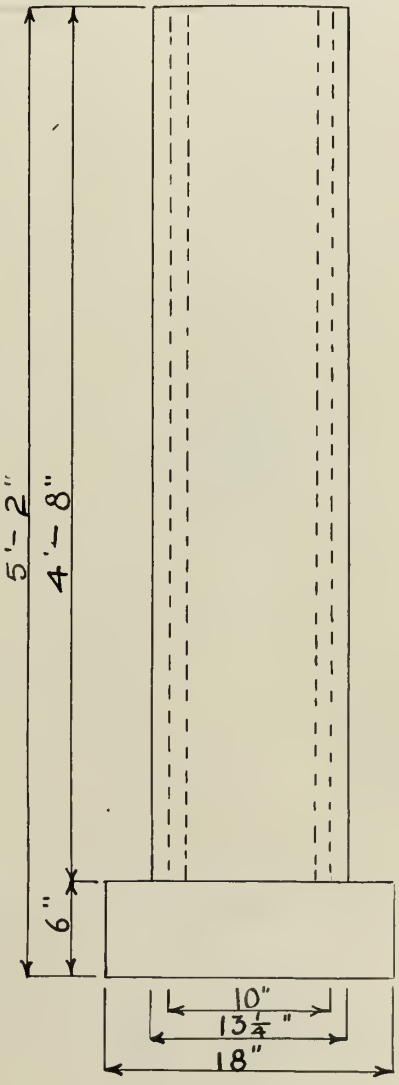

Nos. 8524 & 8525.

ARRANGEMENT OF REINFORCEMENT IN REINFORCED CONCRETE COLUMNS.

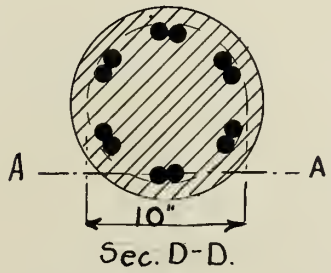

Sec. D-D.

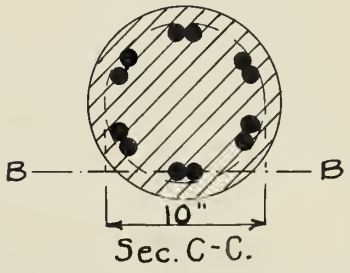

Sec. C-C.

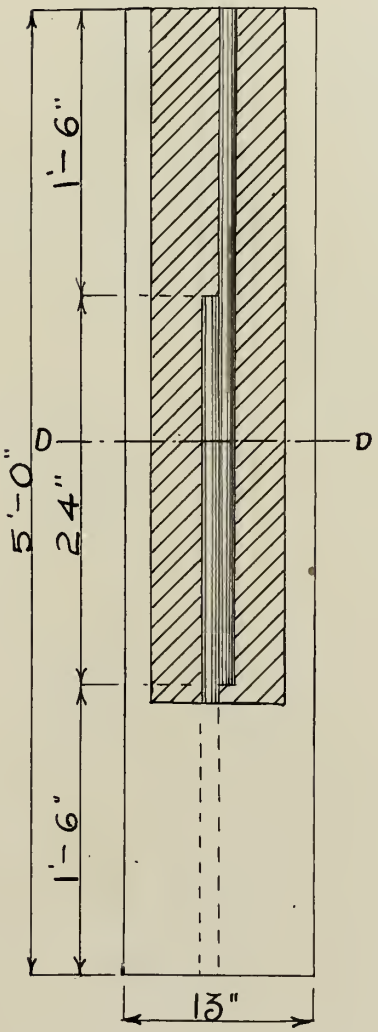

Sec. A-A.

Nos. 8536 & 8537.

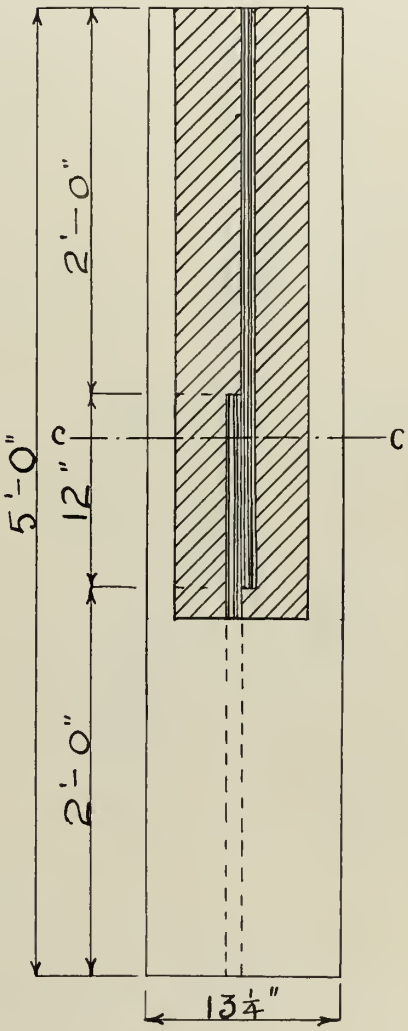

Sec. B-B.

Nos. 8538 & 8539.

nent was there any difference in the columns.

All other considerations, such as the mixing and placing of the concrete, time and place of storage, position in the testing machine, increment of load, etc., were the same, or as nearly the same conditions as could be produced in each case.

The general conditions which were the same are as follows:-

Length, 5 ft. (approximately.)

Mixture, 1 part (by volume) of cement, 2 parts sand, and 4 parts stone. At the top of the column the mixture was made a little richer in cement to prevent failure at that point.

Reinforcement, 6 1-in. round rods, spaced equally inside a 10-in. circle, except in Column No. 8511, in which the rods were spaced equally outside a 10-in. circle. (See Plate III).

Column No. 8511.

Age, 60 days; Area, 123 sq. in.; Percentage of steel, 3.83; Ends of rods squared, and resting directly upon the end plates; Maximum load, 323000 lb.; Maximum stress, 2640 lb. per sq. in.

At a load of 200000 lb. fine vertical cracks appeared over the reinforcing rods, near the bottom of the column; at 275000 lb. vertical cracks were noticed at the top of the column; at 310000 lb., the column cracked from top to bottom on the south side; and failure occurred at a load of 323000 lb.

The failure of the column was due to the buckling of the reinforcing rods, which, bending outward, caused tension in the concrete near the surface about the center of the column. As soon as the rods began to buckle they lost their ability to sustain loads, thus allowing the load to bear more heavily on the concrete,

causing the column to fail by crushing and bulging at the center.

Column No. 8512.

Age, 62 days; Area, 131 sq. in.; Percentage of steel, 3.60; Ends of rods squared, solid bearing on both end plates; Maximum load, 490000 lb.; Maximum stress, 3740 lb. per sq. in.

The load was steadily increased up to 490000 lb., the maximum, when cracks appeared at various points on the circumference, near the central portion of the length. The load then began to fall off, and when it had fallen to 435000 lb., the column failed suddenly about 2 ft. from the bottom, between the central and the lower hoop. From the appearance of the failure the rods evidently buckled, and failure occurred in the same manner as in Column No. 8511.

Column No. 8513.

Age, 59 days; Area, 130 sq. in.; Percentage of steel, 3.62; Reinforcement, same as in Column No. 8512; Maximum load, 452000 lb.; Maximum stress, 3460 lb. per sq. in.

At 448000 lb. zigzag cracks, with a vertical trend, parallel to the reinforcing rods, appeared just below the central hoop; and when the maximum load (448000 lb.) was reached, the column failed by the buckling of the rods, and the bulging of the concrete below the central hoop, in the same manner as Columns No. 8511 and 8512.

Column No. 8516.

Age, 63 days; Area, 135 sq. in.; Percentage of steel, 3.50; Reinforcement, ends of rods sheared, uneven bearing on both end plates; Maximum load, 449000 lb.; Maximum stress, 3320 lb. per sq.in.

At a load of 425000 lb., vertical cracks appeared around the circumference of the column, near the central portion; at 449000 lb.,(the maximum load), failure occurred by the buckling of the rods, bursting their way out thru the concrete below the central hoop.

Column No. 8517.

Age, 59 days; Area, 125 sq. in.; Reinforcement, omitted thru error in making; Maximum load, 223000 lb.; Maximum stress, 1790 lb. per sq. in.

This column failed very suddenly, after reaching the maximum load. Failure occurred about 2 ft. above the bottom; the column shearing off diagonally, like most un-reinforced concrete columns.

Column No. 8518.

Age, 59 days; Area, 128 sq. in.; Percentage of steel, 3.68; Ends of rods 2 in. off end plates, held in position by loose gas pipe sleeve and wooden plug; Maximum load, 250000 lb.; Maximum stress, 1950 lb. per sq. in.

At the maximum load a small transverse crack appeared near the bottom of the column. The load began to fall off, and the crack extended until it reached entirely around the circumference. When the load had fallen to 220000 lb., the concrete began to spall; at 150000 lb. a bulge appeared about 2 ft. 4 in. from the bottom, evidently caused by the slipping of the rods inside the column and the consequent crushing of the concrete at the bulged portion.

After a steady falling off of the load to 68000 lb., the

column held at this point, and then the load began to rise again, probably caused by the compacting of the concrete, making a firm bearing above and below the ends of the rods. Failure may be considered to have occurred at the appearance of the bulge, indicating a slipping of the rods.

Column No. 8519.

Age, 74 days; Area, 135 sq. in.; Percentage of steel. 3.50; Reinforcement arranged the same as in Column No. 8518; Maximum load, 248000 lb.; Maximum stress, 1840 lb. per sq. in.

Failure occurred in the same manner as in Column No. 8518, by the slipping of the rods and appearance of a bulge about 18 in. above the bottom of the column.

Column No. 8524.

Age, 61 days; Area, 141 sq. in.; Percentage of steel, 3.35; Reinforcing rods resting on a concrete base 18 x 18 x 6 in., restrained by heavy hooping; base made 5 days before column; Maximum load, 329000 lb.; Maximum stress, 2230 lb. per sq. in.

In this experiment the failure occurred in the column; a bulge appeared below the central band, indicating a slipping of the rods, which pushed their way downward a short distance into the base. The base cracked across one corner, the crack extending downward only about two-thirds of the depth of the base from the top. The base being reinforced, and being made before the column proper, proved stronger and more able to resist the load than the column.

Column No. 8525.

Age, 68 days; Area, 134 sq. in.; Percentage of steel, 3.52;

Reinforcement, same as in Column No. 8524; Maximum load, 294000 lb.; Maximum stress, 2180 lb. per sq. in.

At the maximum load a horizontal crack appeared, about 18 in. above the base of the column, and rapidly extended around the circumference of the column. The load fell off slowly, and no definite failure occurred. No cracks appeared in the base for a considerable time after the maximum load had been reached, this being an indication that the base was considerably stronger than the column proper.

Column No. 8526.

Age, 62 days; Area, 134 sq. in.; Percentage of steel, 3.52; Reinforcement, rods bent on 6-in. radius into base 25 x 24 x 5 in. Column and base were made together, and base was not restrained by hooping, as in Columns No. 8524 and 8525. Maximum load, 425000 lb.; Maximum stress, 3170 lb. per sq. in.

At 425000 lb., the maximum load, a vertical crack appeared on the side of the base, and the upper face of the base showed a crack diagonally across one corner. The load fell off gradually to 325000 lb., and the base cracked into a shape approximately circular, evidently caused by a slipping of the rods, causing tension in the concrete of the base, and pushing off the corners. The column bulged below the central hoop, also indicating a slipping of the rods and a crushing of the concrete. In this case the column proper stood up better than the base.

Column No. 8531.

Age, 65 days; Area, 134 sq. in; Percentage of steel, 3.52; Reinforcement, rods spliced at center with loose sleeve of gas pipe, 6 in. long; square bearing on both end plates; Maximum load,

403000 lb.; Maximum stress, 3010 lb. per sq. in.

At 400000 lb. vertical cracks appeared near the central portion of the column; the load rose to 403000 lb., the maximum, then fell to 300000 lb. when failure occurred by the buckling of the rods, in the same manner as in Columns No. 8511, 8512, and 8513.

Column No. 8532.

Age, 73 days; Area, 134 sq. in.; Percentage of steel, 3.52; Reinforcement, same as in Column No. 8531; Maximum load, 394000 lb.; Maximum stress, 294000 lb.

This specimen failed suddenly when the maximum load was reached. The rods bent outward, pushing the surrounding concrete also outward, away from the central bulging portion. Failure occurred at the central portion of the column, at the splices in the rods, indicating that the bending of the rods occurred at the splices. The sleeves were strong enough to resist bending, but the rods themselves bent just above the sleeves.

Column No. 8536.

Age, 64 days; Area, 134 sq. in.; Percentage of steel, 3.52; Reinforcement, rods spliced at the center of the column by lapping 24 in.; direct bearing on both end plates; Maximum load, 325000 lb.; Maximum stress, 2430 lb. per sq. in.

At the maximum load vertical cracks appeared at the central portion of the column; the load fell off to 290000 lb., then rose again to 323000 lb., indicating that the rods had slipped, compacting the concrete at the ends of the rods to a more solid bearing. The machine was stopped at 300000 lb. Failure occurred by a bulge about 16 in. below the top, showing that the lower

rods had held and the upper ones had slipped.

Column No. 8537.

Age, 69 days; Area, 134 sq. in.; Percentage of steel, 3.52; Reinforcement, same as in Column No. 8536; Maximum load, 319000 lb.; Maximum stress, 2340 lb. per sq. in.

Failure occurred in the same manner as in Column No. 8536, by bulging about 18 in. below the top, indicating that in this case, also, the upper rods slipped and the lower rods held.

Column No. 8538.

Age, 59 days; Area, 139 sq. in.; Percentage of steel, 3.40; Reinforcement, rods spliced at center with a 12-in. lap; ends of rods resting directly against end plates; Maximum load, 279000 lb.; Maximum stress, 1870 lb. per sq. in.

at 270000 lb. vertical cracks appeared about 18 in. below the top of the column; At 279000 lb. failure occurred by bulging at the center, due to the slipping past each other of the rods at the splice, and the consequent crushing of the concrete in that part of the column.

Column No. 8539.

Age, 69 days; Area, 135 sq. in.; Percentage of steel, 3.50; Reinforcement arranged in the same manner as in Column No. 8538; Maximum load, 311000 lb.; Maximum stress, 2300 lb. per sq. in.

Failure occurred in the same manner as in Column No. 8538, by the slipping past each other of the rods at the splice, and the bulging at the center of the column. In this case the bulge appeared above and below the central hoop, being restrained from bulging at the center by the hoop.

4. Discussion of Cube Tests.

Table No. VII is a record of the tests of the 6-in. cubes made from the same batches of concrete as the columns.

Comparing this table with Table No. V., it will be seen that only in four cases did the strength of the column per unit area exceed the strength of the cubes, notwithstanding the fact that the columns were reinforced. These four columns were Nos. 8512, 8513, 8519 and 8526; and it is significant to note that in two of the four columns - Nos. 8512 and 8513 - the conditions of the reinforcement were as nearly perfect as possible; rods with squared ends, solid bearing on both plates, and not spliced.

That the cubes usually proved much stronger than the columns is very probably due to two causes - (1) the better ramming of the concrete in the cube molds and (2) the restraining effect of the bearing plates at the top and bottom of the cubes, the friction of these plates preventing the cubes from crushing until a very high load was reached.

Three cubes were made from each batch of concrete, and the average strength was found for the three.

Table No. VIII.

TESTS OF 6-IN. CONCRETE CUBES.

Concrete as in Column No.	Age, days.		Unit load, lb. per sq. in.	Remarks.
8511	103.		2553	Cube was badly battered.
	103		3430	
	103		3470	
		Av.	3151	
8512	90		2480	
	90		2170	
	90		2320	
		Av.	2323	
8513	71		2620	No. 8517 made from same batch
(8517)	71		2310	of concrete.
	71		2510	
		Av.	2480	
8516	85		3580	
	86		3730	
	88		3190	
		Av.	3500	
8518.	102.		2310	No. 8531, and base of No. 8524
(8531)	102		2625	made from same batch of concrete.
(8524-b)	102		3100	
		Av.	3012	
8519	87		2700	No. 8532 made from same batch of
(8532)	87		2860	concrete.
	87		2560	
		Av.	2707	
8524	81		2980	Base of No. 8525 made from same
(8525-b)	81		2935	batch of concrete.
	82		2685	
		Av.	2867.	
8525	88		2730	No. 8526 made from same batch of
(8526)	88		2700	concrete.
	89		2750	
		Av.	2727	
8536	102		2725	
	102		2945	
	102		2505	
		Av.	2725.	
8537	69		2170	No. 8539 made from same batch of
(8539)	69		2410	concrete.
	69		2365	
		Av.	2315	
8538	81		2455	
	81		2230	
	82		2435	
		Av.	2373	

2744

PART V.

CONCLUSION.

---o---

As a result of the series of tests described in this thesis, the following conclusions may be drawn:-

Considering first the different methods of splicing the reinforcing rods, the most efficient form of splice, as determined by these experiments, is that in which the rods are squared, butted together and held in place by a sleeve. The efficiency of columns the rods of which are spliced in this manner, from Table No. V, "Summary of Column Tests", is about 83 per cent of that in which the rods are continuous, without splice.

That the lap splice of the dimensions used in these tests is a much less efficient form of splice than the sleeve splice is seen from the fact that the efficiency of the lap splice was only from 58 to 66 per cent, or from 20 to 43 per cent weaker than the sleeve splice.

It can also be seen, by comparing the strength of a column in which the rods are lap-spliced with that of a plain concrete column that whatever advantage is gained by adding reinforcement is lost again thru the inefficiency of the lap splice in the rods. It will be noticed that the columns containing a lap splice developed from 97 to 110 per cent of the average strength of plain concrete columns - not enough to pay any attention to, as there will be that much, if not more, variation in the strength of the columns themselves.

Altho the efficiency is increased slightly by increasing the length of the lap, the increase in efficiency is not in propor-

tion to the increase in the length of the lap. It will therefore be seen that the lap splice is a very unsatisfactory, uneconomical form to use in a reinforced concrete column.

Of the different end conditions of reinforcement used in actual practice, the most efficient type is that in which the rods are bent in a quarter circle into the footing or floor. Columns reinforced in this manner developed 88 per cent of the strength of the reinforced columns used for comparison, and 148 per cent of the strength of a plain concrete column. The column in which the rods rested directly upon the concrete base was not quite as strong, this latter type being 83 per cent as strong as the type of column used for comparison, and 38 per cent stronger than the plain concrete column.

The test of the column in which the reinforcing rods were 2 in. off the plate seems to refute the theory generally accepted, that the concrete adheres to the steel and each takes stress in the ratio of their moduli of elasticity. In this case both test columns proved weaker than the plain concrete columns, developing a strength of only 88 per cent of the strength of the concrete columns. If only one reinforced column had proved weak, poor construction might have been assigned as the reason for the weakness; but it is not probable that two columns of the same type of reinforcement, but made at different times and of different batches of concrete, would both be of poor construction. It seems evident from these tests that the steel in a reinforced concrete column receives more direct compression, and less stress from its adhesion to the concrete, than it is given credit for in the usual theory of reinforced concrete columns.

PART VI.

1. Tables of Individual Columns.

Table No.	Column No.
VIII	8512.
IX	8513.
X	8517.
XI	8519.
XII	8532.
XIII	8537.
XIV	8539..

2. Stress-Deformation Diagrams.

Plate No.	Column No.
VII	8512.
VIII	8513.
IX	8517.
X	8519.
XI.	8532.
XII	8537.
XIII	8539.

Table No. VIII.

COLUMN. NO. 8512.

Circumference = 3 ft. 4-5/8 in. = 40.6 in.

Area = 40.6 x (40.6 ÷ $\overline{4. \times 3.1416}$) =.131 sq. in.

"Total Deformation" = actual deformation in 40 in.

Total load, lb.	Total def., in.	Unit load, lb.per sq.in.	Unit def., in.
81000	0.0000	61	0.000000
20000	0.0005	153	0.000013
40000	0.0017	310	0.000043
60000	0.0035	458	0.000088
80000	0.0056	610	0.000138
100000	0.0075	763	0.000188
120000	0.0095	915	0.000238
140000	0.0117	1070	0.000293
160000	0.0136	1220	0.000340
180000	0.0160	1370	0.000400
190000	0.0177	1450	0.000443
200000	0.0198	1525	0.000495
220000	0.0212	1680	0.000530
91000	0.0122	694	0.000305
100000	0.0128	763	0.000320
120000	0.0136	915	0.000340
140000	0.0152	1070	0.000380
160000	0.0170	1220	0.000425
180000	0.0186	1370	0.000465
200000	0.0202	1450	0.000505
220000	0.0219	1680	0.000548
240000	0.0237	1830	0.000590

Table No. VIII. (Continued).

Total load, lb.	Total def. in.	Unit load, lb.per sq.in.	Unit def., in.
255000	0.0254	1950	0.000650
260000	0.0273	1985	0.000680
281000	0.0294	2140	0.000735
300000	0.0319	2290	0.000780
320000	0.0346	2440	0.000865
330000	0.0363	2530	0.000910
340000	0.0379	2590	0.000948
350000	0.0410	2660	0.001000
360000	0.0420	2750	0.001050
370000	0.0430	2830	0.001080
380000	0.0450	2900	0.001130
390000	0.0470	2970	0.001180
400000	0.0490	3050	0.001225
410000	0.0515	3130	0.001290
420000	0.0542	3200	0.001360
430000	0.0570	3280	0.001430
440000	0.0604	3350	0.001510
450000	0.0675	3430	0.001690
460000	0.0692	3500	0.001740
470000	0.0716	3580	0.001790
480000	0.0752	3670	0.001880
490000	0.0885	3740	0.002222
450000	0.1024	3430	0.002560
470000	0.1051	3580	0.002630
480000	0.1075	3670	0.002680
486000	0.1160	3710	0.002900

Table No. IX.

COLUMN NO. 8513.

Circumference = 3 ft. 4-1/2 in. = 40.5 in.

Area = 40.5 x (40.5 ÷ $\overline{4 \times 3.1416}$) = 130 sq. in.

"Total Deformation" = actual deformation in 40 in.

Total load, lb.	Total def., in.	Unit load, lb.per sq.in.	Unit def., in.
11000	0.0000	81	0.0000000
41000	0.0026	315	0.000065
70000	0.0047	536	0.000118
103000	0.0077	790	0.000192
127000	0.0100	975	0.000250
151000	0.0125	1160	0.000312
174000	0.0154	1340	0.000385
200000	0.0179	1530	0.000447
227000	0.0212	1740	0.000530
250000	0.0244	1920	0.000610
275000	0.0276	2110	0.000690
300000	0.0317	2300	0.000790
325000	0.0367	2490	0.000920
350000	0.0420	2680	0.001050
375000	0.0478	2870	0.001195
400000	0.0563	3060	0.001410
423000	0.0672	3240	0.001680
448000	0.1020	3430	0.002550
452000		3460	

Table No. X.

COLUMN NO. 8517.

Circumference = 3 ft. 3-1/2 in. = 39.5 in.

Area = $39.5 \times (39.5 \div \overline{4 \times 3.1416}) = 125$ sq. in.

" Total Deformation" = actual deformation in 40 in.

Total load, lb.	Total def., in.	Unit load, lb.per sq.in.	Unit def., in.
11000	0.0000	87	0.000000
35000	0.0030	280	0.000075
70000	0.0074	560	0.000180
101000	0.0119	810	0.000296
125000	0.0268	1000	0.000670
150000	0.0230	1200	0.000575
174000	0.0283	1390	0.000710
200000	0.0392	1600	0.000980
223000		1790	

Table No. XI.

COLUMN NO. 8519.

Circumference = 3 ft. 5-1/4 in. = 41.25 in.

Area = 41.25 x (41.25 ÷ $\overline{4 \times 3.1416}$) = 135 sq. in.

"Total Deformation" = actual deformation in 40 in.

Total load, lb.	Total def., in.	Unit load, lb.per sq.in.	Unit def., in.
11000	0.0000	81	0.000000
32000	0.0015	237	0.000038
69000	0.0050	510	0.000125
100000	0.0088	740	0.000220
126000	0.0115	935	0.000287
151000	0.0146	1120	0.000365
175000	0.0173	1300	0.000433
200000	0.0220	1480	0.000550
225000	0.0280	1670	0.000700
248000	0.0500	1840	0.001250
220000	0.0860	1630	0.002150

Table No. XII.

COLUMN NO. 8532.

Circumference = 3 ft. 5 in. = 41 in.

Area = 41 x (41 ÷ $\overline{4 \times 3.1416}$) = 134 sq. in.

"Total Deformation" = actual deformation in 40 in.

Total load, lb.	Total def., in.	Unit load, lb.per sq.in.	Unit def. in.
11000	0.0010	82	0.000025
33000	0.0027	246	0.000068
73000	0.0065	544	0.000183
116000	0.0119	865	0.000297
140000	0.0147	1040	0.000369
169000	0.0188	1260	0.000470
200000	0.0229	1490	0.000571
229000	0.0264	1710	0.000660
255000	0.0315	1900	0.000780
281000	0.0366	2100	0.000940
306000	0.0419	2280	0.001050
342000	0.0520	2550	0.001300
370000	0.0633	2760	0.001590
394000	0.0930	2940	0.002330

Table No. XIII.

COLUMN NO. 8537

Circumference = 3 ft. 5 in. = 41 in.

Area = $41 \times (41 \div \overline{4 \times 3.1416}) = 134$ sq. in.

"Total Deformation" = actual deformation in 40 in.

Total load, lb.	Total def., in.	Unit load, lb.per sq.in.	Unit def. in.
11000	0.0000	82	0.000000
42000	0.0027	313	0.000068
73000	0.0045	545	0.000112
102000	0.0070	760	0.000175
125III	0.0088	932	0.000220
150000	0.0117	1120	0.000292
174000	0.0140	1300	0.000350
199000	0.0168	1485	0.000420
225000	0.0203	1680	0.000510
250000	0.0235	1870	0.000586
275000	0.0267	2050	0.000665
300000	0.0335	2230	0.000840
313000		2340	

Table No. XIV.

COLUMN NO. 8539

Circumference = 3 ft. 5-1/4 in. = 41.25 in.

Area = 41.25 x (41.25 ÷ $\overline{4 \times 3.1416}$) = 135 sq.in.

" Total Deformation" = actual deformation in 40 in.

Total load, lb.	Total def., in.	Unit load, lb.per sq.in.	Unit def., in.
11000	0.0005	82	0.000013
41000	0.0025	303	0.000063
73000	0.0055	540	0.000138
100000	0.0079	740	0.000196
127000	0.0105	940	0.000263
150000	0.0131	1110	0.000327
173000	0.0174	1280	0.000435
200000	0.0196	1480	0.000490
225000	0.0237	1670	0.000590
250000	0.0298	1850	0.000748
275000	0.0390	2030	0.000975
300000	0.0585	2220	0.001460
311000		2300	

Plate VII.

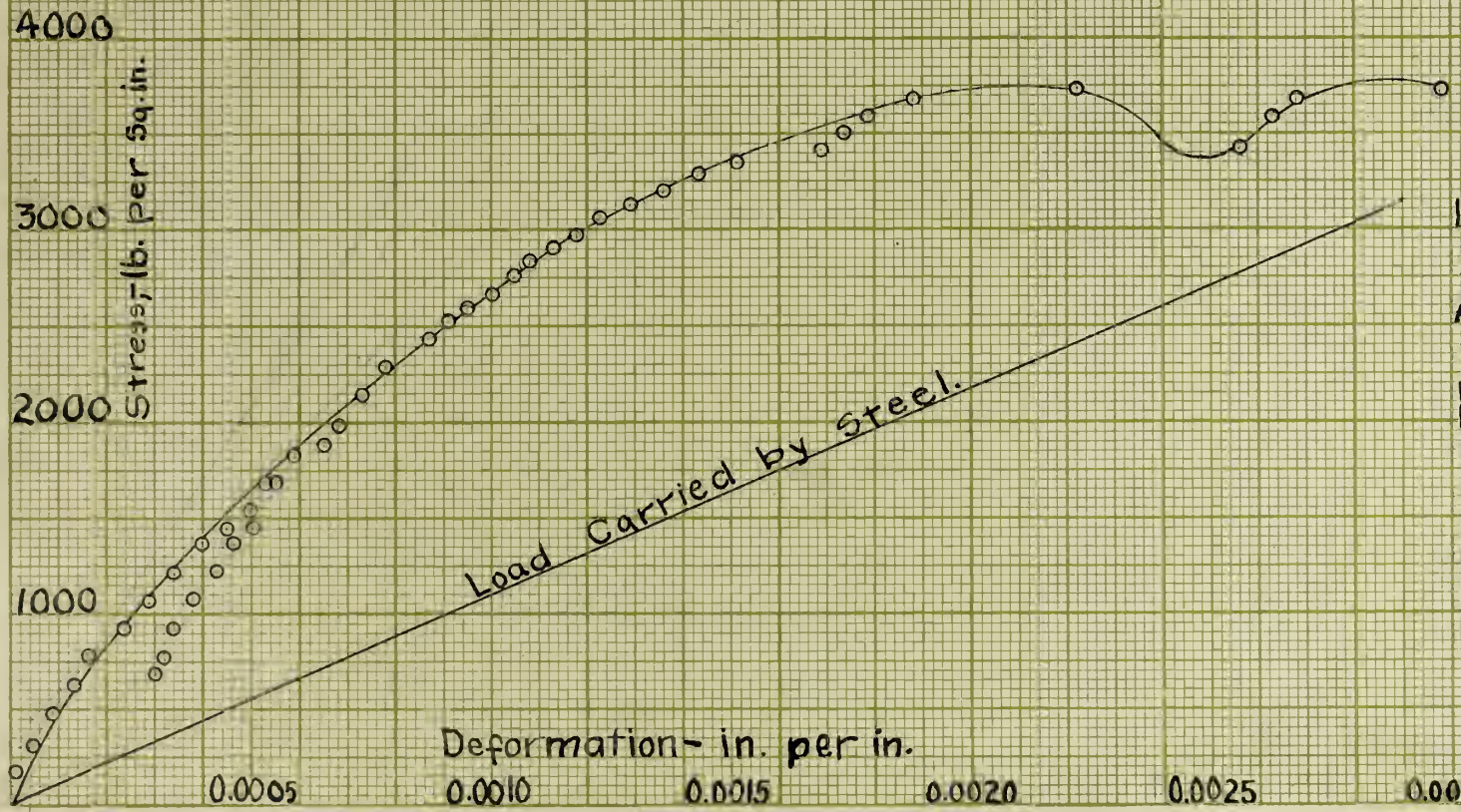

COLUMN NO. 8512.
Length, 5 ft. - 0¼ in.
Area, 131 Sq in.
Age, 62 days.
Reinf. 6 1" rods, ends milled, solid bearing at both ends.
Cement, Universal.
Mixture, 1-2-4.
Max. Load, 490,000 #
Max. Unit Stress 3740 #.
Per Cent. of Steel = 3.60.

McCorn 6.10.

EUGENE DIETZGEN CO., CHICAGO.

Plate VIII.

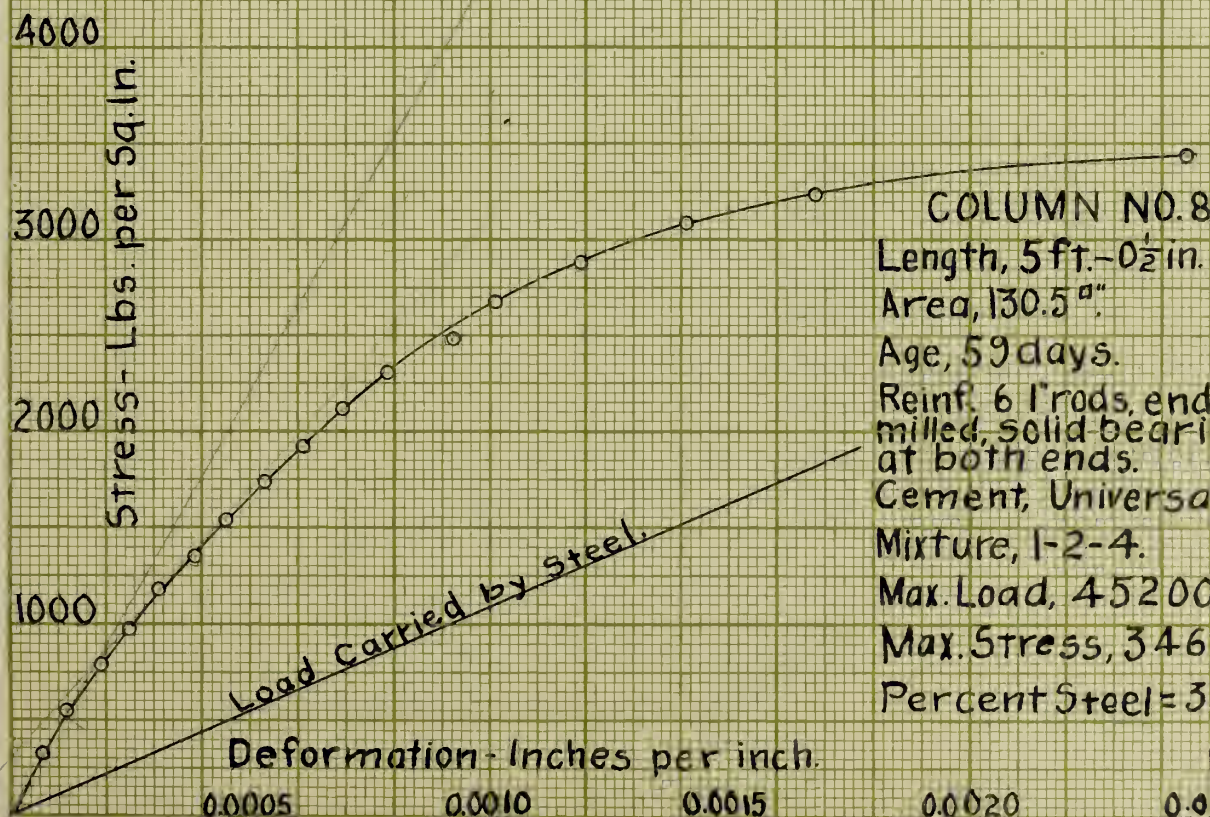

COLUMN NO. 8513.
Length, 5 ft. - 0½ in.
Area, 130.5 sq. in.
Age, 59 days.
Reinf. 6 1" rods, ends milled, solid bearing at both ends.
Cement, Universal.
Mixture, 1-2-4.
Max. Load, 452000 lbs.
Max. Stress, 3460 lbs. per sq. in.
Percent Steel = 3.62.

McComb. 10

EUGENE DIETZGEN CO., CHICAGO.

Plate IX.

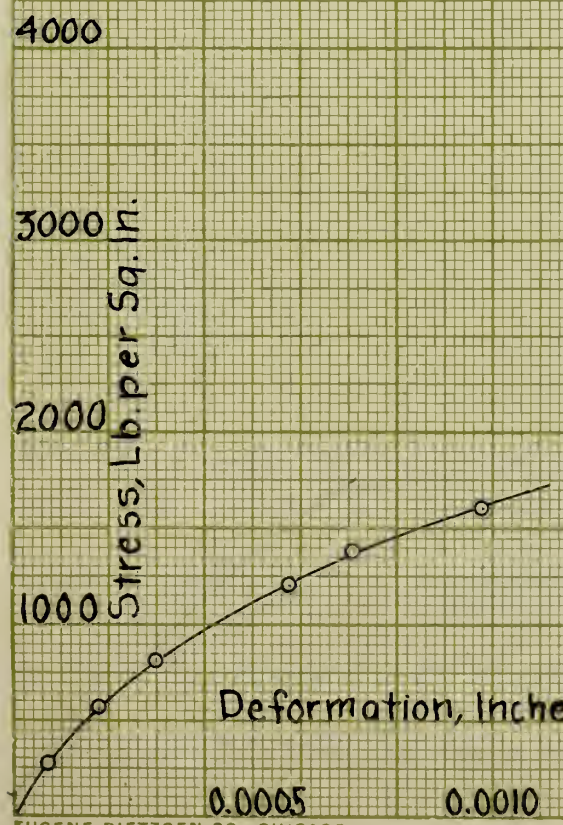

COLUMN NO. 8517.
Length, 5'-0½".
Area, 125 □".
Cement, Universal.
Mixture, 1-2-4.
Age 59 days.
Reinf. None.
Max. Load, 223000#.
Max. Stress, 1790 #/□".

McComb, '10.

EUGENE DIETZGEN CO., CHICAGO.

Plate X.

COLUMN NO. 8519.
Length, 5'-3"
Area, 135 □"
Cement, Universal.
Mixture, 1-2-4.
Age, 74 days.
Reinf. 6 1" rods 2" off Plate at each end.
Max. Load, 248000#
Max. Stress, 1840#/□".
Per Cent. Steel = 3.50.

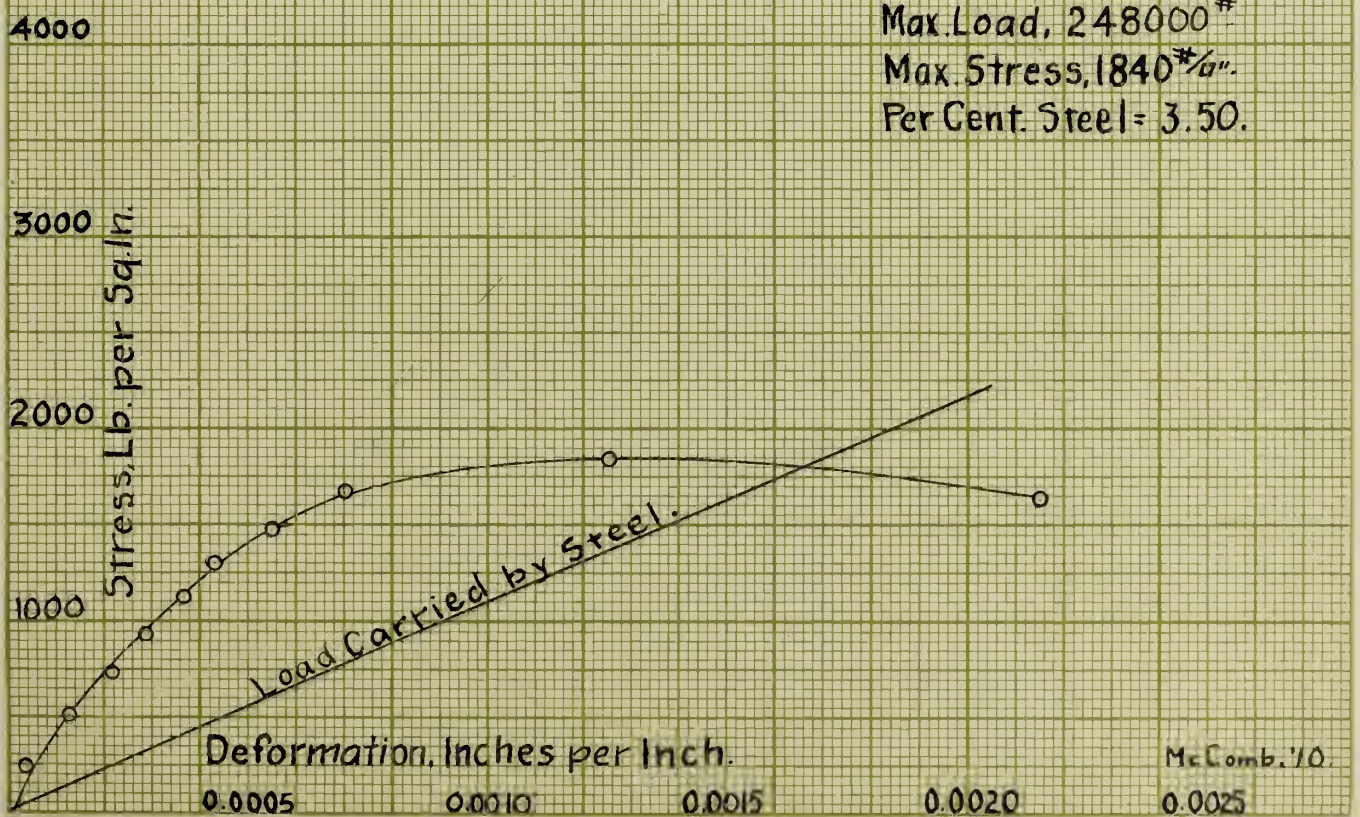

McComb. '10.

EUGENE DIETZGEN CO., CHICAGO.

Plate XI.

COLUMN NO. 8532.
Length, 5'-2¼".
Area, 134 □"
Cement, Universal.
Mixture, 1-2-4.
Age, 73 days.
Reinf. 6 1" rods spliced at center with gas-pipe, 6" long, 1" diam.
Max. load, 394000#
Max. Stress, 2940 #/□"
Per Cent. Steel, 3.52

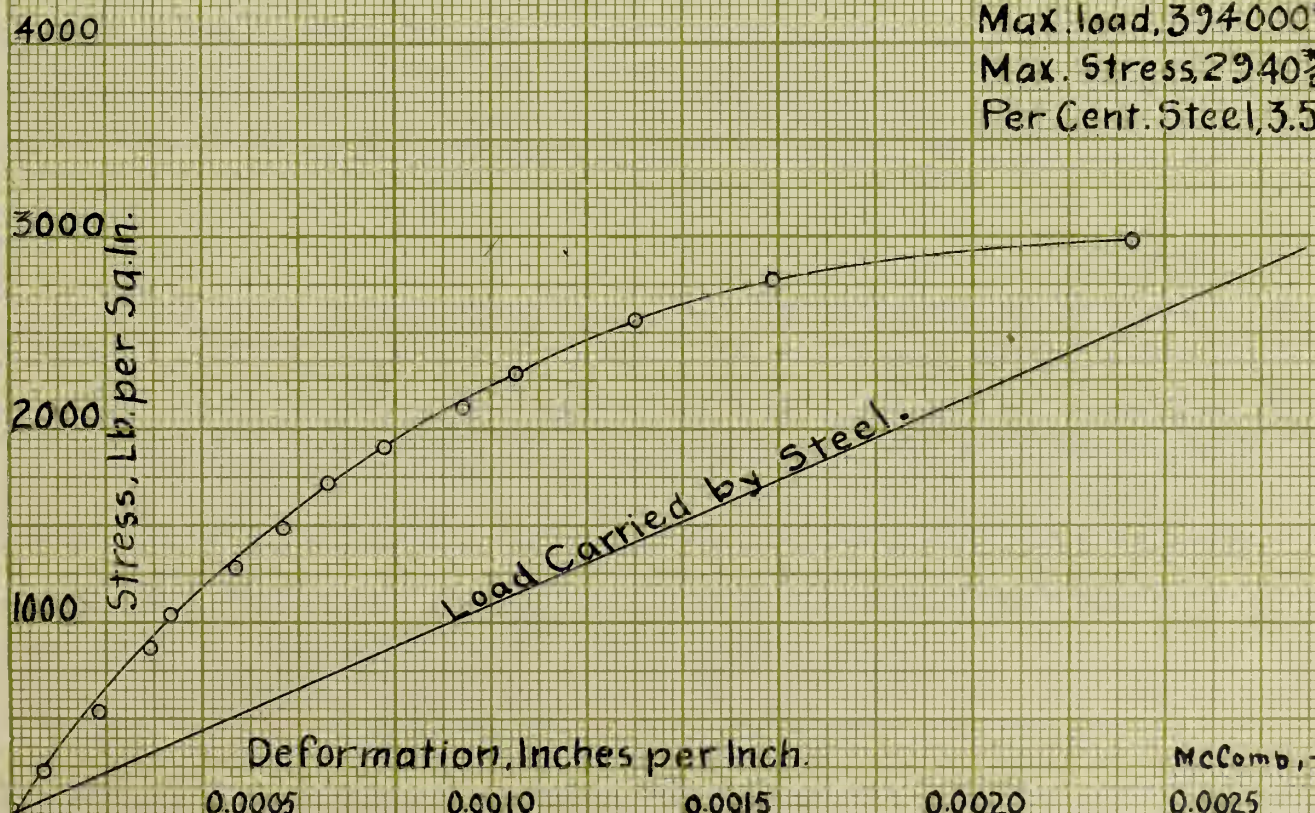

McComb, -10

EUGENE DIETZGEN CO., CHICAGO.

Plate XII.

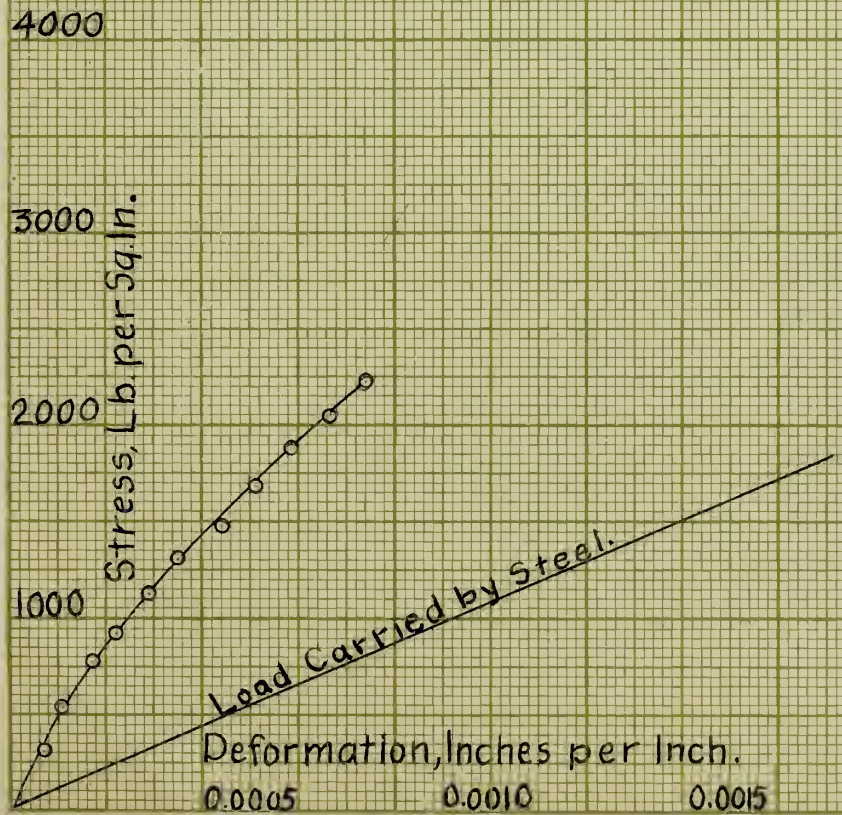

COLUMN NO. 8537.
Length, 5'-0"
Area, 134 □".
Cement, Universal.
Mixture, 1-2-4.
Age, 69 days.
Reinf. 6 1" rods, spliced with 24" lap at center.

Max. Load, 313000#.
Max. Stress, 2340 #/□".
Per Cent. Steel,

McComb. '10.

EUGENE DIETZGEN CO., CHICAGO.

Plate XIII.

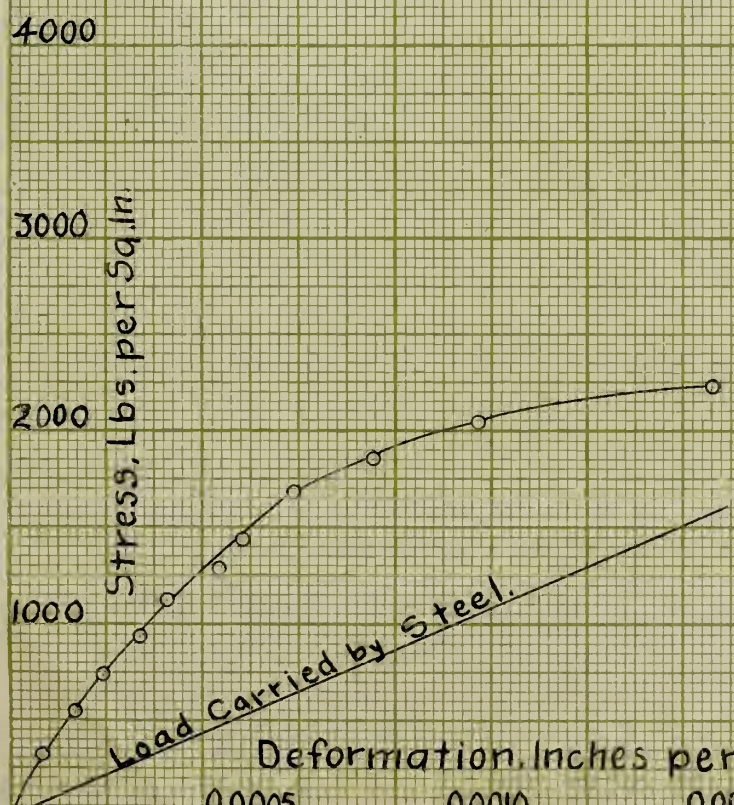

COLUMN NO. 8539.
Length, 5'-0".
Area, 135 □".
Cement, Universal.
Mixture, 1-2-4.
Age, 69 days.
Reinf. 6 1" rods, spliced with 12" lap at center.
Max. Load, 311000#.
Max. Stress. 2300 #/□".
Per Cent. Steel = 3.50.

McComb, '10.

EUGENE DIETZGEN CO., CHICAGO.